JENSEN®
music industries

P 12 N - 8 Ω
Guitar Loudspeaker
Ref. # ZJ06040

GENERAL CHARACTERISTICS		
Nominal Overall Diameter	307	mm
Nominal Voice Coil Diameter	38	mm
Magnet Weight	826	g
Flux Density	1.26	T

ELECTRICAL CHARACTERISTICS		
Nominal Impedance	8	Ω
Rated Power (DIN 45573 - IEC 268.5)	50	W
Musical Power (DIN 45500)	100	W
Sensitivity @ 1 W, 1 m	98.4	dB

THIELE-SMALL PARAMETERS			
Voice Coil DC Resistance	R_E	6.20	Ω
Resonance Frequency	f_s	90.0	Hz
Mechanical Q Factor	Q_{MS}	5.72	
Electrical Q Factor	Q_{ES}	0.82	
Total Q Factor	Q_{TS}	0.72	
Mechanical Moving Mass	M_{MS}	26.7	g
Mechanical Compliance	C_{MS}	119.0	μm/N
Force Factor	$B{\times}l$	10.64	Wb/m
Equivalent Acoustic Volume	V_{AS}	40.2	lt.
Maximum Linear Displacement	X_{MAX}	1.00	mm
Reference Efficiency	η_0	3.40	%
Diaphragm Area	S_D	490.8	cm^2
Losses Electrical Resistance	R_{ES}	43.0	Ω
Voice Coil Inductance @ 1kHz	L_E	0.87	mH

CONSTRUCTIVE CHARACTERISTICS	
Magnet	AlNiCo
Voice Coil Winding	Copper
Voice Coil Former	Kapton
Cone	Paper
Surround	Integrated Paper
Dust Dome	Solid Paper
Basket	Pressed Sheet Steel

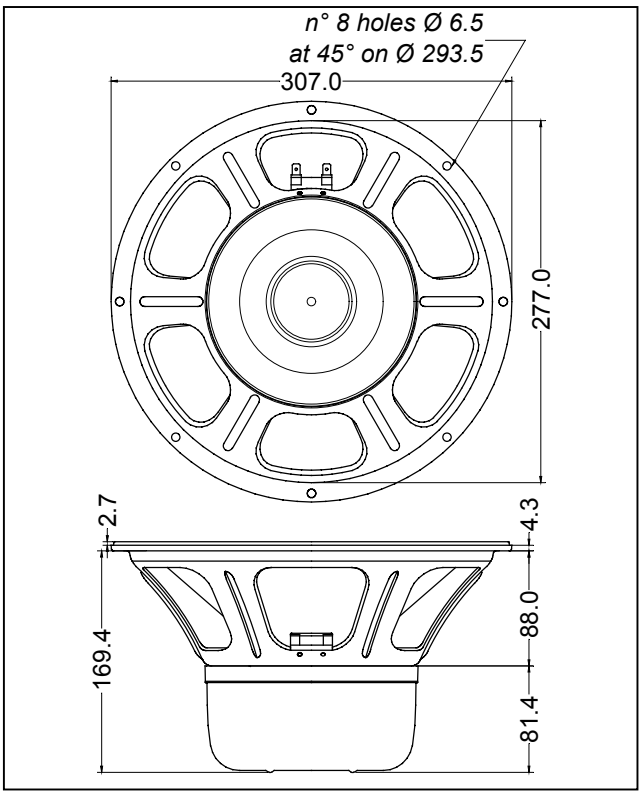

Frequency Response on IEC Baffle (DIN 45575) @ 1 W, 1 m - Impedance

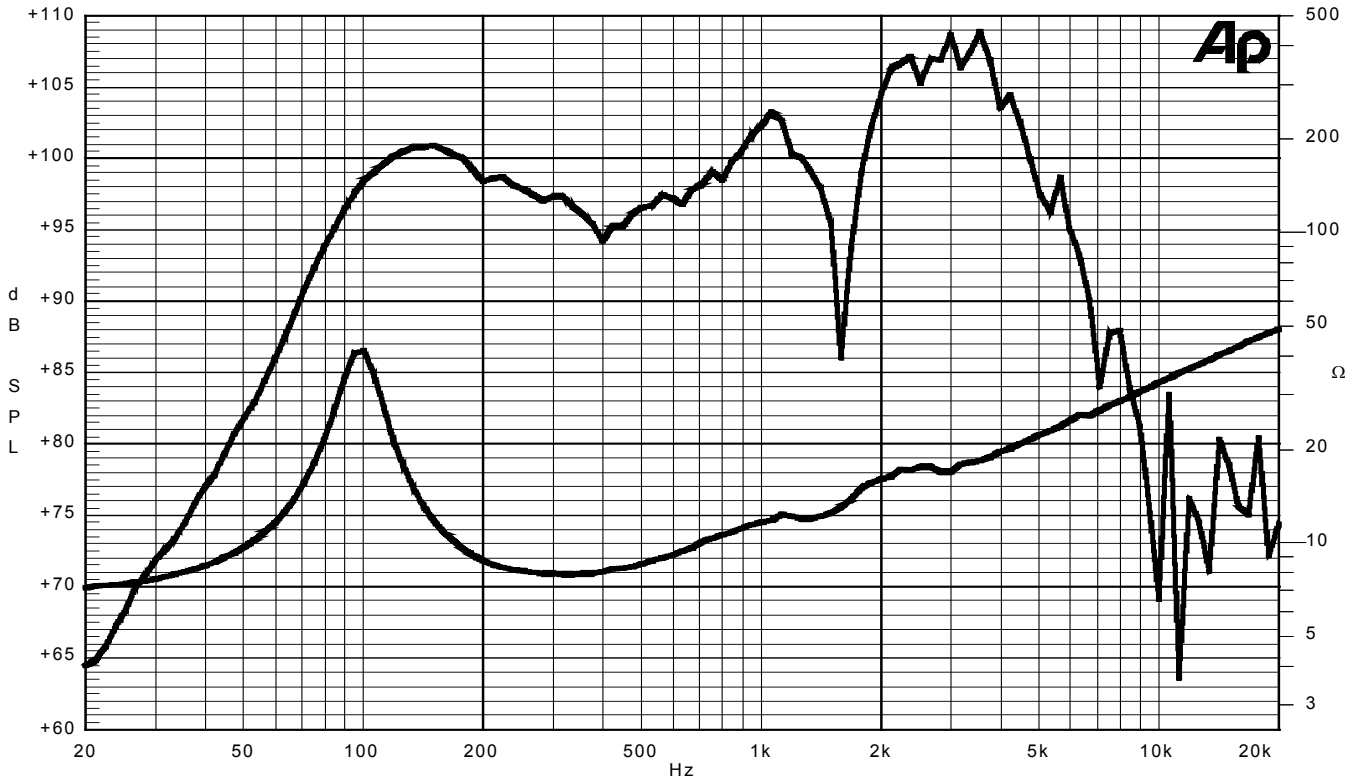

Due to continuing product improvement, the features and the design are subject to change without notice.

31/03/2005

Loudspeakers R & D - Via G. Galilei, 20 - 60010 PASSO RIPE (AN) - ITALY - Tel. +39-071-7958072 - Fax +39-071-7959006 - E-mail: lab@sica.it